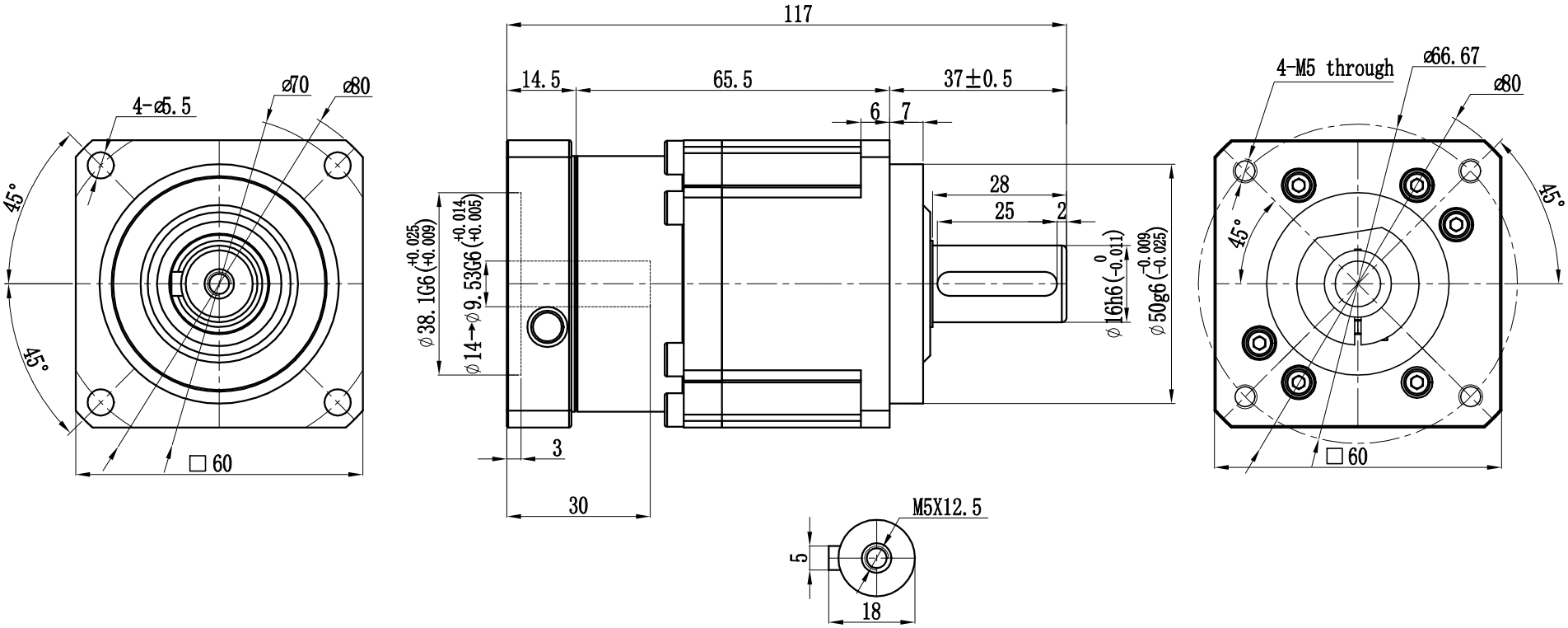

When input speed is 3000rpm

Reduction Ratio	1:3	1:4	1:5	1:6	1:7	1:8	1:9	1:10
Rated Output Torque(N.M)	55	50	60	55	50	45	40	40
Moment of inertia(Kgcm^2)	0.16	0.14	0.13	0.13	0.13	0.13	0.13	0.13
Noise (n=3000,noload,1m)(dB)	≤56dB							

Instant Torque(N.M)	3X RATED	Backlash(arcmin)	≤5
Reduction Stage	1	Rated Input Speed(rpm)	3000
Radial Load(N)	1530	Max Input Speed(rpm)	6000
Axial Load(N)	765	Level Of Protection (IP)	IP65
Efficiency	≥97%	Weight(kg)	1.3

						Dimensional drawing		Source Engineering INC
mark	revise	partition	reversion	sign	Y M D			model NO. 060SB-1stage-0001
design			standard			phase marker	weight	scale
check						S		Full
aproval								
process			confirm			Total 1	No. 1	